CRANFORDCONTROLS FIRE & SECURITY

VSO-32E base sounder 24Vdc

EN54 part 3 approved

The VSO-32E base sounder is for use with conventional fire alarm systems, including SAV-WIRE® two wire and is designed to accept most leading detector bases and offers a cost effective solution to sounder installation. The low profile sounder is supplied with 32 tones, along with a two-stage alarm override which is activated by a third negative wire from the fire panel.

All tones have been selected to comply with the latest sound patterns and frequencies used throughout the world. All tone options are fully synchronised. This sounder has been fully approved to EN54 part 3 by the LPCB and VdS on tones 1, 3, 11, 25 and 27.

When a detector is not being mounted to the sounder a blank cover plate is available so that the unit can be used as a stand alone sounder.

- 32 tones plus a selectable override tone
- switch selectable volume control
- designed to work with both conventional and two-wire (SAV-WIRE®) systems
- fully approved to EN54-3 by LPCB and VdS
- modern ultra low profile for discreet mounting
- designed to accept most leading detector bases (contact us for colour options available)

TECHNICAL

voltage range (Vdc)	18 - 30
number of tones	32
operating frequency (Hz)	440 - 2900 Hz
temperature range (°C)	-20 to +70
monitoring	reverse polarity
protection rating	IP21C
boxed weight (kg)	0.11
body colours available	white or ivory (ABS fire retardant plastic)

PERFORMANCE

volume setting	high
sound output, typical (dBA)	93.8
sound output, anechoic chamber (dBA)	91.2
sound output, reverberation chamber (dBA)	110.9
max. current consumption @ 24Vdc (mA)	12.0
power consumption @ 24Vdc (mW)	288

NB: see tone list performance for more accurate current consumption figures

ORDERING INFORMATION

white body, 32 tone	VSO-32E-W
ivory body, 32 tone	VSO-32E-I
white cover plate*	VSO-CP-W
ivory cover plate**	VSO-CP-I
red cover plate	VSO-CP-R

* approved part number 116-009

** approved part number 116-119

APPROVALS INFORMATION

EN54-3

546a/04

G208012

(white version only approved by VdS)

0832-CPR-F0095

innovationdesignmanufacture

00 44 (0)1420 592444 sales@cranfordcontrols.com

DIMENSIONS, PRODUCT MOUNTING & CABLE ENTRY

all measurements are in mm

PLAN VIEW

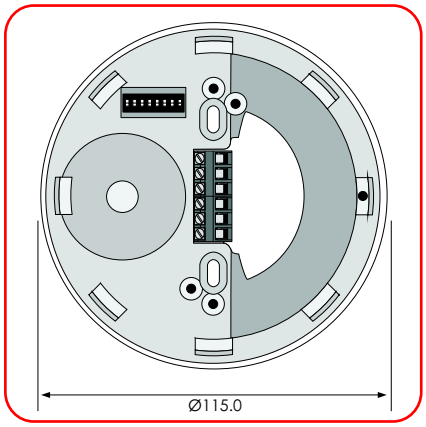

SIDE VIEW

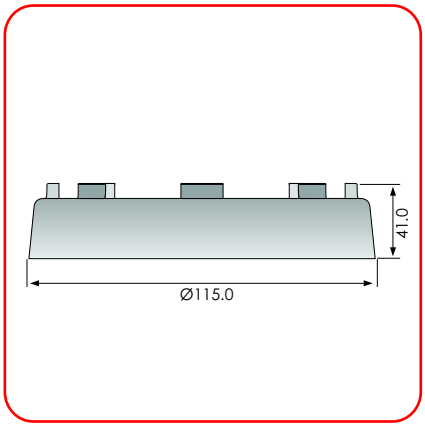

BASE VIEW

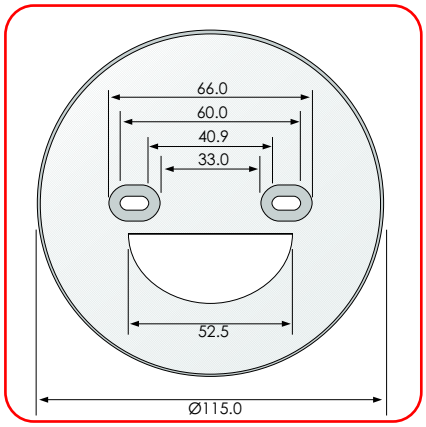

WIRING CONFIGURATION

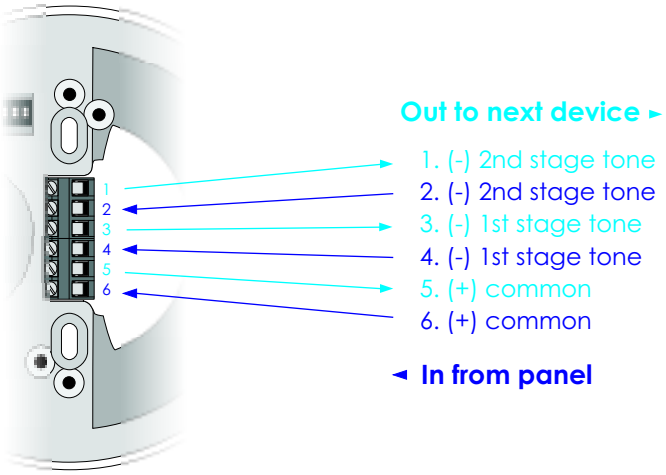

TONE & VOLUME SELECTION

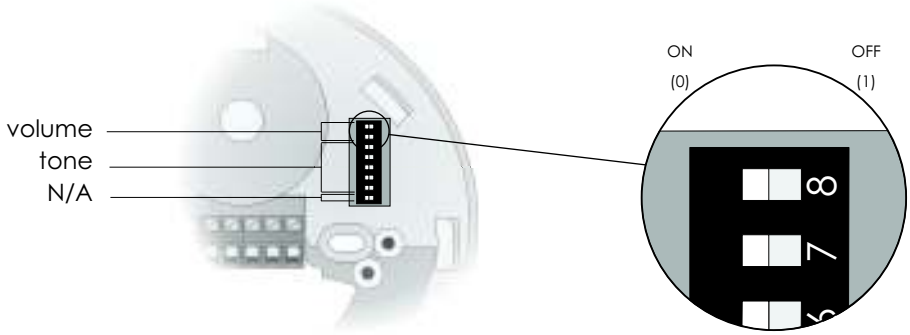

volume	7	8
high	OFF	ON
medium	ON	OFF
low	OFF	OFF

TONE LIST - GRAPHICAL

no.	name	1st stage frequency	1st stage graphical	2nd stage frequency	2nd stage graphical
1	LF Sweep (Cranford sweep)	800-1000Hz swept every 500ms (2Hz)	1000Hz 800Hz 500ms	800Hz continuous	800Hz
2	Alternative warble BS	800Hz for 250ms, then 960Hz for 250ms	1000Hz 800Hz 250ms 250ms	800Hz continuous	800Hz
3	Warble Tone BS	800Hz for 500ms, then 1000Hz for 500ms	1000Hz 800Hz 500ms 500ms	800Hz continuous	800Hz
4	Alternative warble BS	500Hz for 250ms, then 600Hz for 250ms	600Hz 500Hz 250ms 250ms	500Hz continuous	500Hz
5	HF Back up Interrupted	2800Hz for 1000ms, then off for 1000ms	2800Hz 1000ms 1000ms	2800Hz continuous	2800Hz
6	LF Back up Alarm	800Hz for 150ms, then off for 150ms	800Hz 150ms 150ms	800Hz continuous	800Hz
7	HF Back up Interrupted (fast)	2800Hz for 150ms, then off for 150ms	2800Hz 150ms 150ms	800Hz continuous	800Hz
8	LF Continuous tone BS5839	800Hz continuous	800Hz	800Hz continuous	800Hz
9	Sweep - 1Hz	800-900Hz swept every 1000ms (1Hz)	900Hz 800Hz 1000ms	800Hz continuous	800Hz
10	Australian slow whoop	970Hz for 625ms, then off for 150m	970Hz 625ms 625ms	500-1200Hz for 3250ms, then off for 250ms	1200Hz 500Hz 3750ms 250ms
11	Dutch sweep	970Hz continuous	970Hz	500-1200Hz for 3500ms, then off for 500ms	1200Hz 500Hz 3500ms 500ms
12	Analogue sweep	500-600Hz swept every 500ms (2Hz)	600Hz 500Hz 500ms	500Hz continuous	500Hz
13	Sweep - 3Hz	800-970Hz swept every 333ms (3Hz)	970Hz 800Hz 333ms	800Hz continuous	800Hz
14	Alternate HF slow sweep	2350-2900Hz swept every 333ms (3Hz)	2900Hz 2350Hz 333ms	2400Hz continuous	2400Hz
15	Fast HF sweep	2400-2800Hz swept every 143ms (7Hz)	2800Hz 2400Hz 143ms	2400Hz continuous	2400Hz
16	US Temporal Pattern LF	950Hz for 500ms on, 500ms off (x3), then 1500ms off	2400Hz 500ms 500ms 1500ms	800Hz continuous	800Hz
17	Interrupted BS	800Hz for 500ms, then off for 500ms	800Hz 500ms 500ms	800Hz continuous	800Hz
18	ISO 8201 LF BS5839 Pt 1	970Hz for 500ms, then off for 500ms	970Hz 500ms 500ms	970Hz for 500ms, then off for 500ms	970Hz 500ms 500ms
19	Interrupted medium	1000Hz for 250ms, then off for 250ms	1000Hz 250ms 250ms	800Hz continuous	800Hz
20	ISO8201 HF	2850Hz for 500ms, then off for 500ms	2850Hz 500ms 500ms	2850Hz for 500ms, then off for 500ms	2850Hz 500ms 500ms
21	Continuous	1000Hz continuous	1000Hz	1000Hz continuous	1000Hz
22	LF Buzz	800-950Hz swept every 9ms (110Hz)	950Hz 800Hz swept at 110ms	800Hz continuous	800Hz
23	HF Continuous	2800Hz continuous	2800Hz	2800Hz continuous	2800Hz
24	Sweep	800-970Hz swept every 111ms (9Hz)	970Hz 800Hz 111ms	800Hz continuous	800Hz
25	German DIN tone	1200-500Hz swept every 1000ms (1Hz)	1200Hz 500Hz 1000ms	800Hz continuous	800Hz
26	Swedish Fire signal	660Hz for 150ms, then off for 150ms	660Hz 150ms 150ms	660Hz for 150ms, then off for 150ms	660Hz 150ms 150ms
27	French tone AFNOR	554Hz for 100ms, then 440Hz for 400ms	554Hz 440Hz 100ms 400ms	800Hz continuous	800Hz
28	Swedish all clear signal	660Hz continuous	660Hz	660Hz continuous	660Hz
29	US Temporal Pattern HF	2900Hz for 500ms on, 500ms off (x3), then1500ms off	2900Hz 500ms 500ms 1500ms	2900Hz continuous	2900Hz
30	Siren 2 way ramp (short)	500-1200Hz rising for 250ms, then falling for 250ms	1200Hz 500Hz 250ms	800Hz continuous	800Hz
31	FP1063.1-Telecom	800Hz for 250ms, then 970Hz for 250ms	970Hz 800Hz 250ms 250ms	800Hz continuous	800Hz
32	Siren 2 way ramp (long)	500-1200Hz rising for 3000ms, then falling for 3000ms	1200Hz 500Hz 3000ms 3000ms	800Hz continuous	800Hz

TONE LIST - PERFORMANCE

				typical current (mA)			typical sound output (dBA)		
no.	name	1st stage frequency	switch (23456)	low	medium	high	low	medium	high
1	LF Sweep (Cranford sweep)	800-1000Hz swept every 500ms (2Hz)	11111	5.7	7.0	9.4	86.2	87.7	91.2
2	Alternative warble BS	800Hz for 250ms, then 960Hz for 250ms	11110	5.5	6.9	9.1	85.3	87.1	90.7
3	Warble Tone BS	800Hz for 500ms, then 1000Hz for 500ms	11101	5.5	6.8	9.2	85.2	87.8	91.1
4	Alternative warble BS	500Hz for 250ms, then 600Hz for 250ms	11100	5.0	6.0	7.5	82.7	84.8	87.6
5	HF Back up Interrupted	2800Hz for 1000ms, then off for 1000ms	11011	5.8	7.5	11.5	88.8	91.2	95.3
6	LF Back up Alarm	800Hz for 150ms, then off for 150ms	11010	4.7	6.1	8.7	83.9	86.0	88.9
7	HF Back up Interrupted (fast)	2800Hz for 150ms, then off for 150ms	11001	4.8	6.1	11.3	88.0	90.3	94.3
8	LF Continuous tone BS5839	800Hz continuous	11000	5.4	6.6	8.6	85.0	87.2	90.2
9	Sweep - 1Hz	800-900Hz swept every 1000ms (1Hz)	10111	5.7	6.9	9.1	85.8	88.3	91.4
10	Australian slow whoop	970Hz for 625ms, then off for 150m	10110	5.3	3.4	9.2	85.6	87.8	91.0
11	Dutch sweep	500-1200Hz 3.5s on, 1.5s off	10101	5.5	6.9	8.8	86.3	89.2	93.2
12	Analogue sweep	500-600Hz swept every 500ms (2Hz)	10100	5.0	6.0	7.7	85.3	87.1	89.5
13	Sweep - 3Hz	800-970Hz swept every 333ms (3Hz)	10011	5.7	6.9	9.3	85.6	88.0	91.1
14	Alternate HF slow sweep	2350-2900Hz swept every 333ms (3Hz)	10010	6.0	7.9	11.8	88.1	91.1	94.8
15	Fast HF sweep	2400-2800Hz swept every 143ms (7Hz)	10001	5.9	7.9	11.9	87.7	90.7	94.5
16	US Temporal Pattern LF	950Hz for 500ms on, 500ms off (x3), then 1500ms off	10000	4.9	5.9	8.8	85.7	88.2	91.1
17	Interrupted BS	800Hz for 500ms, then off for 500ms	01111	5.1	6.1	9.0	84.6	88.2	90.1
18	ISO 8201 LF BS5839 Pt 1	970Hz for 500ms, then off for 500ms	01110	5.0	6.0	9.1	85.4	87.6	91.1
19	Interrupted medium	1000Hz for 250ms, then off for 250ms	01101	5.5	5.8	9.4	84.9	87.4	90.4
20	ISO8201 HF	2850Hz for 500ms, then off for 500ms	01100	5.0	6.1	10.6	88.1	91.0	94.4
21	Continuous	1000Hz continuous	01011	5.7	6.9	9.5	85.2	87.9	91.0
22	LF Buzz	800-950Hz swept every 9ms (110Hz)	01010	5.5	6.8	8.8	85.4	87.8	90.8
23	HF Continuous	2800Hz continuous	01001	5.8	7.3	11.0	89.0	91.5	95.2
24	Sweep	800-970Hz swept every 111ms (9Hz)	01000	5.4	6.6	8.7	85.7	88.0	91.1
25	German DIN tone	1200-500Hz swept every 1000ms (1Hz)	00111	5.4	6.5	8.6	85.5	87.7	90.7
26	Swedish Fire signal	660Hz for 150ms, then off for 150ms	00110	4.7	5.7	6.8	86.0	88.0	90.6
27	French tone AFNOR	554Hz for 100ms, then 440Hz for 400ms	00101	4.9	5.9	7.4	85.2	87.1	89.4
28	Swedish all clear signal	660Hz continuous	00100	5.1	6.3	10.6	87.2	89.3	91.8
29	US Temporal Pattern HF	2900Hz for 500ms on, 500ms off (x3), then1500ms off	00011	5.3	6.2	8.7	87.4	90.0	93.5
30	Siren 2 way ramp (short)	500-1200Hz rising for 250ms, then falling for 250ms	00010	5.2	6.5	8.6	85.4	87.6	90.6
31	FP1063.1-Telecom	800Hz for 250ms, then 970Hz for 250ms	00001	5.5	6.8	8.8	85.3	87.7	90.8
32	Siren 2 way ramp (long)	500-1200Hz rising for 3000ms, then falling for 3000ms	00000	5.7	7.0	9.24	86.4	88.8	91.8

EN54-3 APPROVED MINIMUM SOUND OUTPUT AT 1 METER

Tone 1 - LF Sweep (Cranford Sweep)					
Horizontal Plane			Vertical Plane		
Angle	18V	30V	Angle	18V	30V
15°	87.7	81.8	15°	88.6	92.7
45°	84.2	88.4	45°	84.7	88.7
75°	87.4	91.5	75°	88.2	92.4
105°	88.0	91.2	105°	85.7	89.9
135°	84.0	88.1	135°	84.8	89.0
165°	86.7	90.7	165°	89.5	93.8

Tone 3 - Warble Tone					
Horizontal Plane			Vertical Plane		
Angle	18V	30V	Angle	18V	30V
15°	87.6	92.3	15°	88.2	91.8
45°	82.8	87.6	45°	85.4	89.9
75°	88.9	83.6	75°	90.0	94.5
105°	88.6	93.2	105°	87.9	92.4
135°	85.0	89.5	135°	87.2	91.8
165°	86.4	91.0	165°	91.4	95.9

Tone 11 - Dutch Sweep Tone					
Horizontal Plane			Vertical Plane		
Angle	18V	30V	Angle	18V	30V
15°	91.1	94.9	15°	86.5	91.6
45°	881	93	45°	83.2	87.3
75°	89.2	93	75°	86.7	90.5
105°	91.1	94.9	105°	86.5	90.8
135°	87.9	91.3	135°	83.3	87.3
165°	87.2	90.9	165°	87.6	89.6

Tone 25 - German DIN Tone					
Horizontal Plane			Vertical Plane		
Angle	18V	30V	Angle	18V	30V
15°	85.3	89.6	15°	87.2	91.4
45°	82.1	86.4	45°	83.9	88.1
75°	85.9	90.2	75°	86.7	91.1
105°	85.5	89.8	105°	84.2	88.5
135°	81.6	86.0	135°	83.3	87.7
165°	84.7	88.9	165°	87.8	92.2

Tone 27 - French Tone AFNOR					
Horizontal Plane			Vertical Plane		
Angle	18V	30V	Angle	18V	30V
15°	82.8	87.2	15°	83.8	88.1
45°	79.9	84.3	45°	81.7	85.8
75°	84.3	88.7	75°	85.1	89.4
105°	84.1	88.4	105°	82.7	87.0
135°	80.5	85.0	135°	81.7	86.0
165°	82.4	86.7	165°	86.0	90.4

EN54-3 APPROVED POLAR DIAGRAMS

Tone 1 - Cranford Sweep

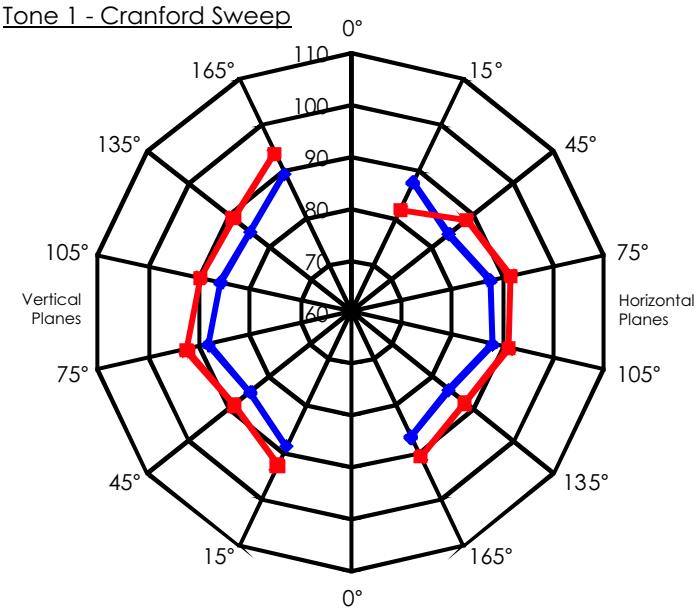

Tone 3 - Warble Tone

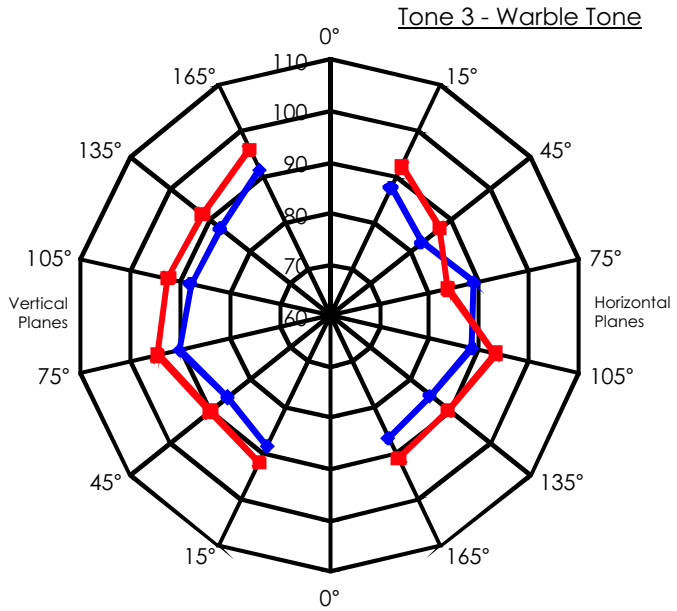

Tone 11 - Dutch Sweep Tone

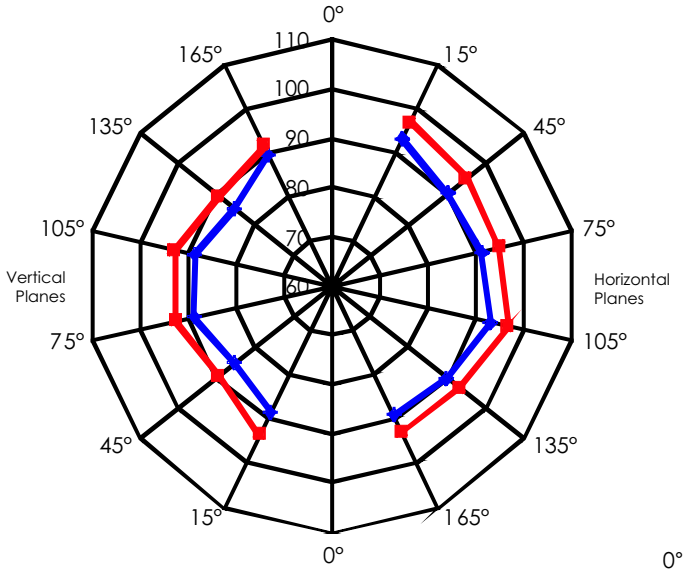

Tone 25 - German DIN Tone

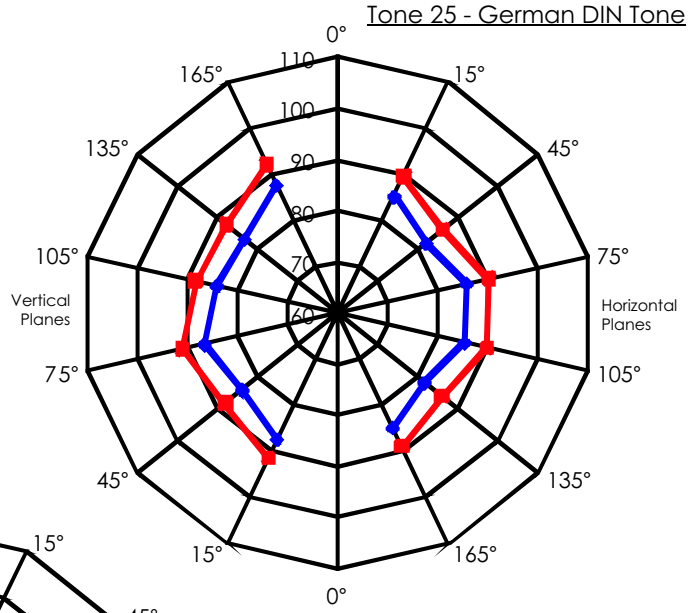

Tone 27 - French Tone AFNOR